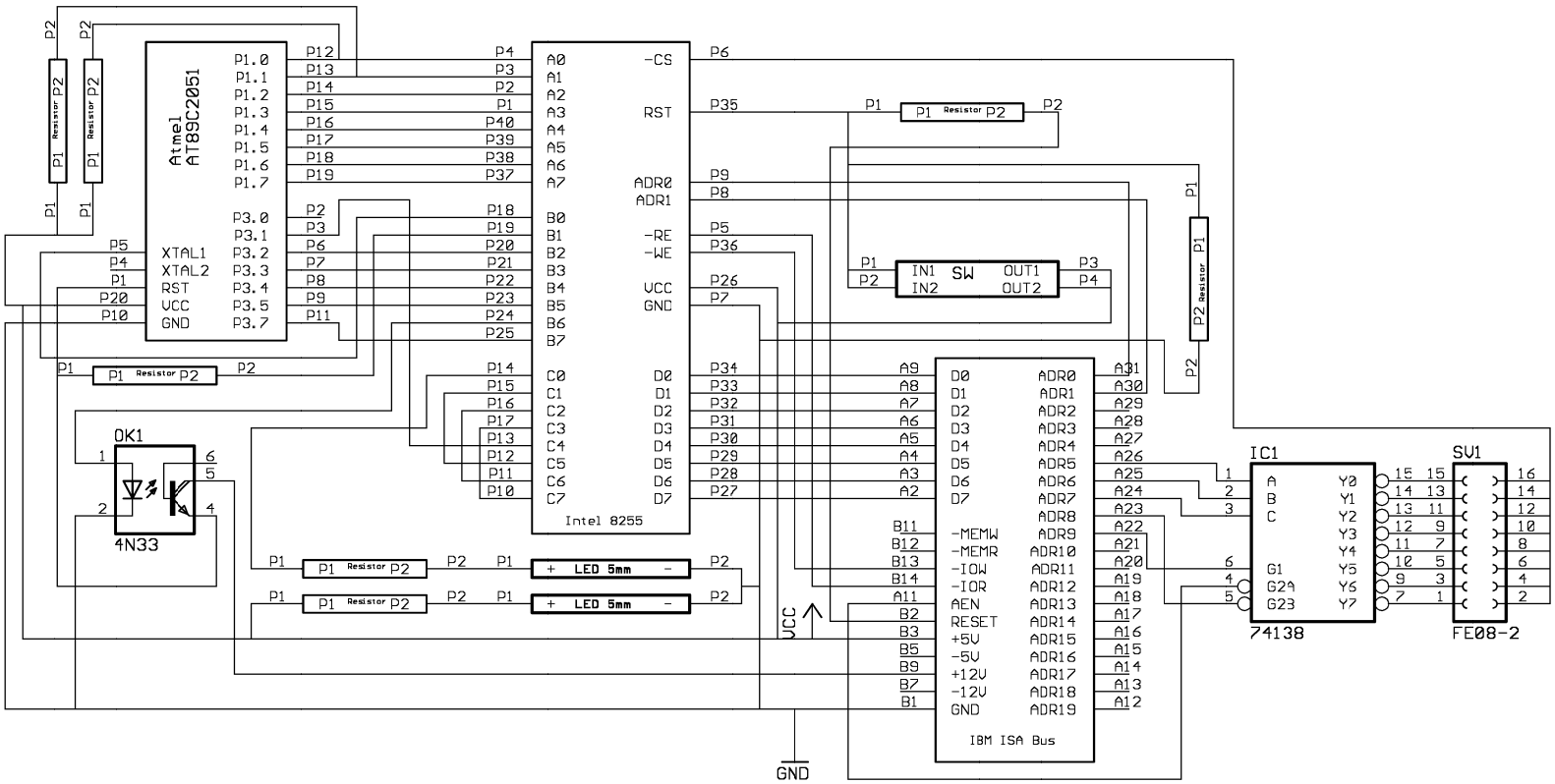
Atmel
AT89C2051
P1.0
P1.1
P1.2
P1.3
P1.4
P1.5
P1.6
P1.7
P3.0
P3.1
P3.2
P3.3
P3.4
P3.5
P3.7
XTAL1
XTAL2
RST
VCC
GND
Intel 8255
A0
A1
A2
A3
A4
A5
A6
A7
B0
B1
B2
B3
B4
B5
B6
B7
C0
C1
C2
C3
C4
C5
C6
C7
-CS
RST
ADR0
ADR1
-RE
-WE
VCC
GND
D0
D1
D2
D3
D4
D5
D6
D7
IBM ISA Bus
-MEMW
-MEMR
-IOW
-IOR
AEN
RESET
+5V
-5V
+12V
-12V
GND
ADR0
ADR1
ADR2
ADR3
ADR4
ADR5
ADR6
ADR7
ADR8
ADR9
ADR10
ADR11
ADR12
ADR13
ADR14
ADR15
ADR16
ADR17
ADR18
ADR19
SW
IN1
IN2
OUT1
OUT2
Resistor
LED 5mm
OK1
4N33
IC1
74138
SV1
FE08-2
VCC
GND